MALE END VIEW (P1)

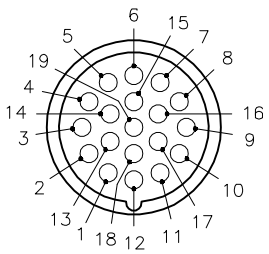

1 = PORT 1–2
2 = PORT 1–4
3 = PORT 1–5
4 = PORT 2–2
5 = N/C
6 = COMMON
7 = PORT 2–4
8 = PORT 2–5
9 = PORT 3–2
10 = PORT 3–4
11 = PORT 3–5
12 = GROUND
13 = N/C
14 = N/C
15 = PORT 4–2
16 = PORT 4–4
17 = PORT 4–5
18 = N/C
19 = POWER

M23 connector

FEMALE END VIEW (J1–J4)

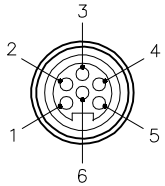

mini fast.

SPECIFICATIONS

HOUSING MATERIAL	DIE–CAST ALUMINUM ALLOY
HOUSING FINISH/COLOR	POWDER COAT/BLACK
RECEPTACLE HOUSING MAT'L/FINISH	STAINLESS STEEL/PASSIVATED
CONTACT CARRIERS/COLOR (J1–J4)	TPU/BLACK
CONTACT CARRIER/COLOR (P1)	NYLON or PBT/WHITE
CONTACT MATERIAL/PLATING	BRASS/GOLD
OPERATING VOLTAGE [V]	150 V
OPERATING CURRENT [A]	3.0 A
PROTECTION CLASS to DIN 40050	IP 67 – ONLY WHEN ALL RECEPTACLES ARE COVERED WITH PLUGS OR CONNECTED
OPERATING TEMPERATURE	–40°C to +80°C (–40°F to +176°F)

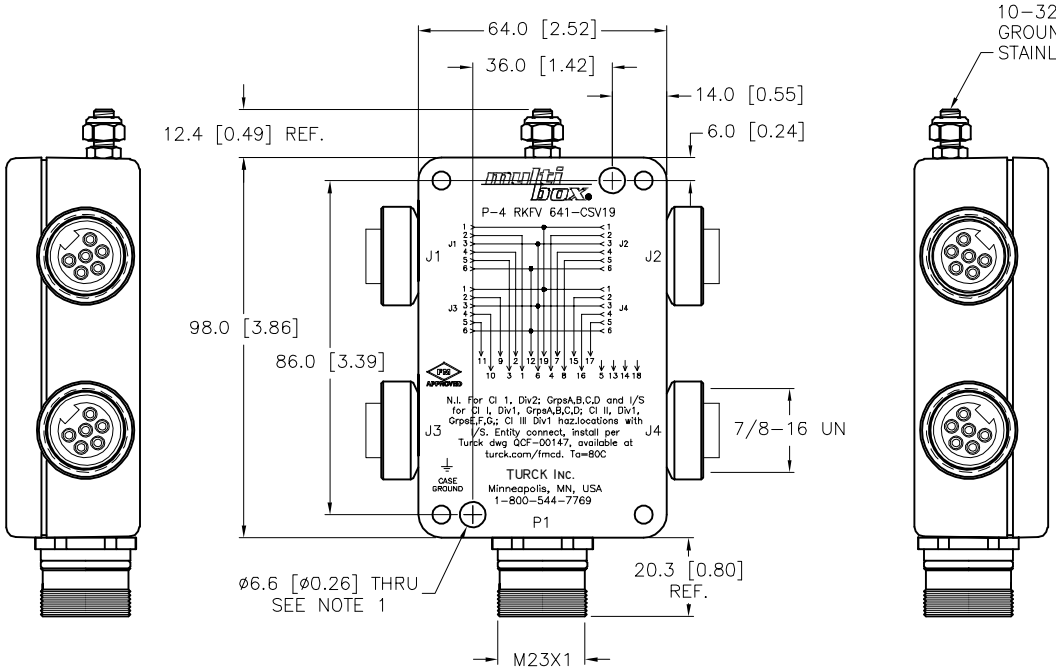

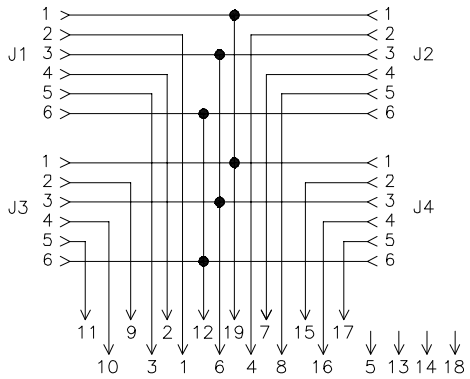

P1
WIRING DIAGRAM

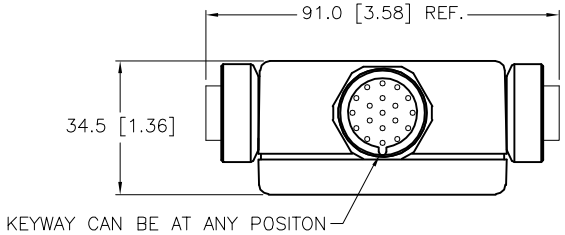

SOURCE DRAWING – FOR REFERENCE ONLY

NOTES:

1. CLEARANCE HOLE FOR 1/4–20 MOUNTING SCREWS (2 NOT INCLUDED).

REV	DESCRIPTION	BY	DATE	ECO NO.
B	UPDATE TEMPERATURE RATING	NF	03/26/19	68987

RELATED DOCUMENTS
1.
2.
3.
4.

3RD ANGLE PROJECTION

THIS DRAWING IS CONFIDENTIAL AND THE PROPERTY OF TURCK INC. USE OF THIS DOCUMENT WITHOUT WRITTEN PERMISSION IS PROHIBITED.

TURCK

3000 CAMPUS DRIVE
MINNEAPOLIS, MN 55441
1–800–544–7769
(763) 553–7300
(763) 553–0708 fax
www.turck.us

MATERIAL: SEE SPECIFICATIONS

FINISH: SEE SPECIFICATIONS

ALL DIMENSIONS DISPLAYED ON THIS DRAWING ARE FOR REFERENCE ONLY

CONTACT TURCK FOR MORE INFORMATION

DRFT: RDS | DATE: 10/01/10
APVD: | SCALE: 1=2.0

UNIT OF MEASUREMENT
MILLIMETER [INCH]
DO NOT SCALE THIS DRAWING

DESCRIPTION: P–4 RKFV 641–CSV19

IDENTIFICATION NO.: U2–18946 | REV: B

FILE: U2–18946 | SHEET 1 OF 1